Tel : +44 118 979 1238
Fax : +44 118 979 1283
email : info@actcrystals.com

ACT9200L CLOCK OSCILLATOR

Compatible with Eu Directive 2002/EC - RoHS

The ACT9200 family is a miniature, low profile SMD package, with a ceramic base utilising a seam welded metal lid for high reliability and better long-term stability. The metal lid is grounded through the package to assist with EMI emission reductions. This 7x5mm device is available as the ACT9200 in both 3V3 and 5V0. 1V8 and 2V5 versions are available as ACT9200L (See ACT9200L data sheet). A 32.768kHz version is available as the 9200WC (See 9200WC data sheet). Taped and reeled packaging (1k reels) and loose quantities are available for purchase, to suit high and low volume production.

Specification

Parameter	Symb.	Specification		Condition
Supply Voltage	Vdd	2.5VDC ± 10%	1.8VDC ± 10%	Please specify
Frequency Range	fo	1.000 ~ 200.00 MHz	1.000~165.000MHz	Please specify
Frequency Stability	Δf/fo	±10ppm ~ ±100ppm (Table 1)(Note)		Please specify
Temp Operating Range	Topr	0 ~ +70°C standard to -40 ~ +85°C (Table 1) (Note 1)		Please specify
Temp Storage Range	Tstg	-55 to +125°C		
Supply Current (max)	Iop	10mA (1.000 ~ 34.999 MHz) 20mA (35.000 ~ 60.00 MHz) 30mA (60.001 ~ 99.999 MHz) 40mA (100.00 ~ 124.999 MHz) 51mA (150.00 ~ 164.999 MHz) 58mA (165.00 ~ 200.00 MHz)	8mA (1.000 ~ 34.999 MHz) 15mA (35.000 ~ 60.00 MHz) 25mA (60.001 ~ 99.999 MHz) 35mA (100.00 ~ 124.999 MHz) 37mA (150.00 ~ 165.000 MHz)	
Duty Cycle	Tw/t	40/60% (Std) & 45/55% available		Please specify
Output Level '0'	VOL	0.4VDC max (TTL)	10% VDD max (HCMOS)	
Output Level '1'	VOH	2.4VDC min (TTL)	90% VDD min (HCMOS)	
Rise & Fall Time (max)	TrTf	10nS (1.000 ~ 34.999 MHz) 8nS (35.00 ~ 60.000 MHz) 5nS (60.00 ~ 99.999 MHz) 2.5nS (100.00 ~200.00 MHz)		
Output Load	N/CL	10TTL / 15pF (30pF available)		
Start-up Time	Tosc	10mS max		
Tri-state Input Voltage		No Connection VIH : ≥90% of V_{DD} VIL : ≤10% of V_{DD}	Enable output Enable output Disable output : High Impedance	
Ageing	Fa	±5ppm ±3ppm option		first year max @25°C
Period Jitter (Absolute)	Tj	100pS max @ 1.0MHz		Other frequencies - see Note 3 below
Period Jitter (one sigma)	Tj	25pS max @ 1.0MHz		Other frequencies - see Note 3 below

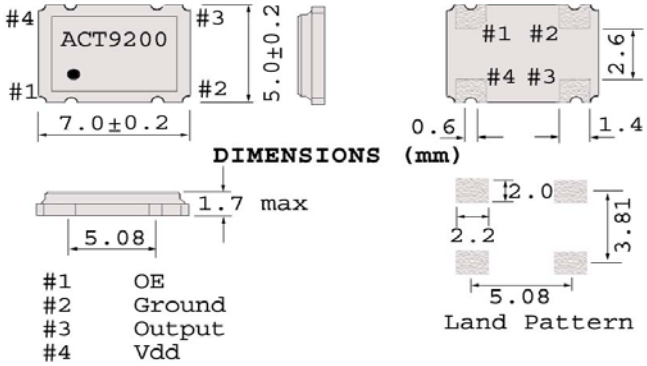

APPLICATIONS
- Microprocessor clock
- PDA / notebook
- Wireless applications
- Audio
- Gigabit ethernet
- Fibre channel
- Instrumentation

Pad surface Material
Au

Note 1: Inclusive of Temperature range, Tolerance @ 25°C, Aging, Vdd variation & Load variation
NOTE 2: To reduce HF power supply noise, an external bypass capacitor of 0.01µF close to ground and Vdd is recommended.
NOTE 3: Typical (max) Jitter values in pS:

	RMS(1 sigma)	Absolute (Pk-Pk)
25MHz:	6.3 (10)	17.8 (28)
33MHZ:	5.2 (10)	14.7 (28)
60MHz:	3.7 (5.0)	10.5 (14.0)
100MHz	1.0 (3.0)	2.8 (8.4)

Please note that all parameters can not necessarily be specified in the same device
Customer to Specify : Frequency, Frequency Stability, Operating Temperature Range, Output Type, Output enable, Voltage, Duty Cycle
In line with our ongoing policy of product evolvement and improvement, the above specification is subject to change without notice.

ISO9001: 2000 Registered

For quotations or further information please contact us at:
3 The Business Centre, Molly Millars Lane, Wokingham, Berks, RG41 2EY, UK
http://www.actcrystals.com

Issue: 11 SKr
Date: 22/05/12

Tel : +44 118 979 1238
Fax : +44 118 979 1283
email : info@actcrystals.com

ACT9200

ACT9200 CLOCK OSCILLATOR

Table 1: Available Stabilities

°C / ppm	±15ppm	±20ppm	±25ppm	±30ppm	±50ppm	±100ppm
0 ~ 50	✓	✓	✓	✓	✓	✓
0 ~ 60	✓	✓	✓	✓	✓	✓
-10 ~ 60	✓	✓	✓	✓	✓	✓
0 ~ 70		✓	✓	✓	✓	✓
-10 ~ 70		✓	✓	✓	✓	✓
-20 ~ 70		✓	✓	✓	✓	✓
-40 ~ 85				✓	✓	✓

Tape Dimensions (mm)

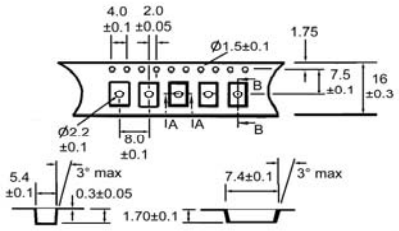

Material PS
Colour white or black

Reel Dimensions (mm)

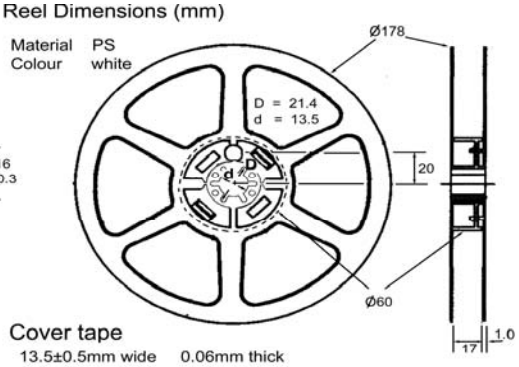

Cover tape
13.5±0.5mm wide 0.06mm thick
Material / colour: PET / white

25mA (1.000 ~ 40.000 MHz)

Recommended Reflow Profile

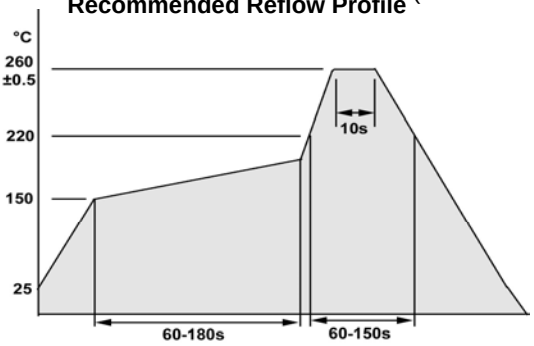

Infrared / convection reflow cycles:

a). 260.5°C max for 10s max x2 reflow cycles.
b). 240 °C for 80s max 1 cycle.

Test Circuit **HCMOS**

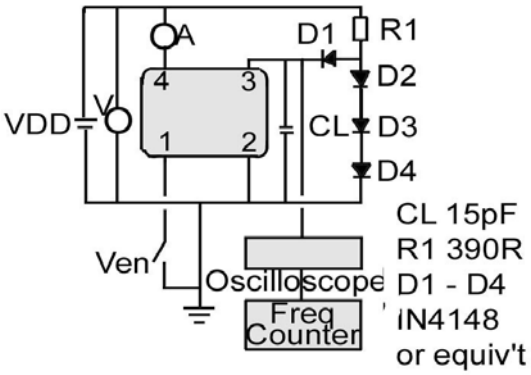

TTL

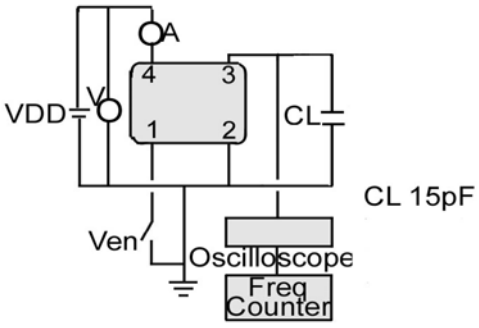

In line with our ongoing policy of product evolvement and improvement, the above specification is subject to change without notice.

ISO9001: 2000 Registered

For quotations or further information please contact us at:
3 The Business Centre, Molly Millars Lane, Wokingham, Berks, RG41 2EY, UK
http://www.actcrystals.com

Issue: 11 SKr
Date: 22/05/12

Advanced crystal technology

Tel : 0044 (0) 118 979 1238
Fax : 0044 (0) 118 979 1283
email : info@actcrystals.com

ACT SMD CLOCK OSCILLATORS - PART NUMBERING & COMMODITY CODES

Highlight = Standard Specification / Parameter

Example :

RV	2500	B	C	C	H	J	P	C	-PF
(ACT9200)	(25.00MHz)	(±50ppm)	2.5 V	(-10+70)	45/55%	Universal (15pF HCMOS // 10TTL)	Tristate	1K Reel	(RoHS)

Device Series Code	
RV	9200

Commodity Codes
Frequency <1.8 or >67MHz
854370 90 99
Frequency between 1.8 & 67 MHz
854370 90 45

Frequency

To 99.9999MHz 1st four digits of Frequency & >99.9999MHz 1st five Digits of Frequency (GHz=1st 6 digits)

Examples

0983 = 9.8304MHz
1200 = 12.000MHz
9999 = 99.9999MHz
10000 = 100.00MHz

NB:

It is important to suffix the above part number with the full frequency required to give a completed part number as illustrated below

Stability over Operating Temperature (±ppm)	
Code	±ppm
D	15
I	20
C	25
H	30
B	50
A	100

Note 1

Voltage	
Code	Volts
C	2.5
D	1.8

Duty Cycle (Symmetry %)	
S	40/60
H	45/55
L	Unspecified

Output Load	
C	CMOS
Q	HCMOS 30 Pf
E	HCMOS
J	UNIVERSAL 15pF HCMOS / 10TTL
H	TTL

Tristate / Output enable	
P	Yes
N	No

RoHS Comp'
- PF

Packaging

L = Loose
C = 1K Reel

Operating Temperature Range (°C)	
D	0~50
F	-10+60-
E	0~70
C	-10+70-
B	-20+70
G	-30+80
I	-40+85

Note 1

Full Example Part Number

RV2500BCCHJPC-PF (25.00MHz)

Table 1: Available Stabilities

°C / ppm	±15ppm	±20ppm	±25ppm	±30ppm	±50ppm	±100ppm
0 ~ 50	✓	✓	✓	✓	✓	✓
0 ~ 60	✓	✓	✓	✓	✓	✓
-10 ~ 60	✓	✓	✓	✓	✓	✓
0 ~ 70		✓	✓	✓	✓	✓
-10 ~ 70		✓	✓	✓	✓	✓
-20 ~ 70		✓	✓	✓	✓	✓
-40 ~ 85				✓	✓	✓

NOTES :

1) **Note 1: Inclusive of Temperature range, Tolerance @ 25°C, Aging, Vdd variation & Load variation.**

2) **Tighter Stabilities, Duty Cycles, Suply Voltages, Output Loads and other Operating Temperature Ranges may be available. As each of these specification parameters may impact on each other, it is not always possible to combine all options in one device. Therefore, if a specification not catered for above is required, please contact us directly for assistance.**

3) **ACT are always happy to consider truly custom specification parts which may require non-standard specification parameters, specific testing, customer requested AQL requirements, non standard packaging or taping and reeling and custom marking. (MOQ DEPENDENT) Such devices would normally be allocated a custom specification (An ACT9200 device may have a part number such as RV2500C- C2222-PF)**